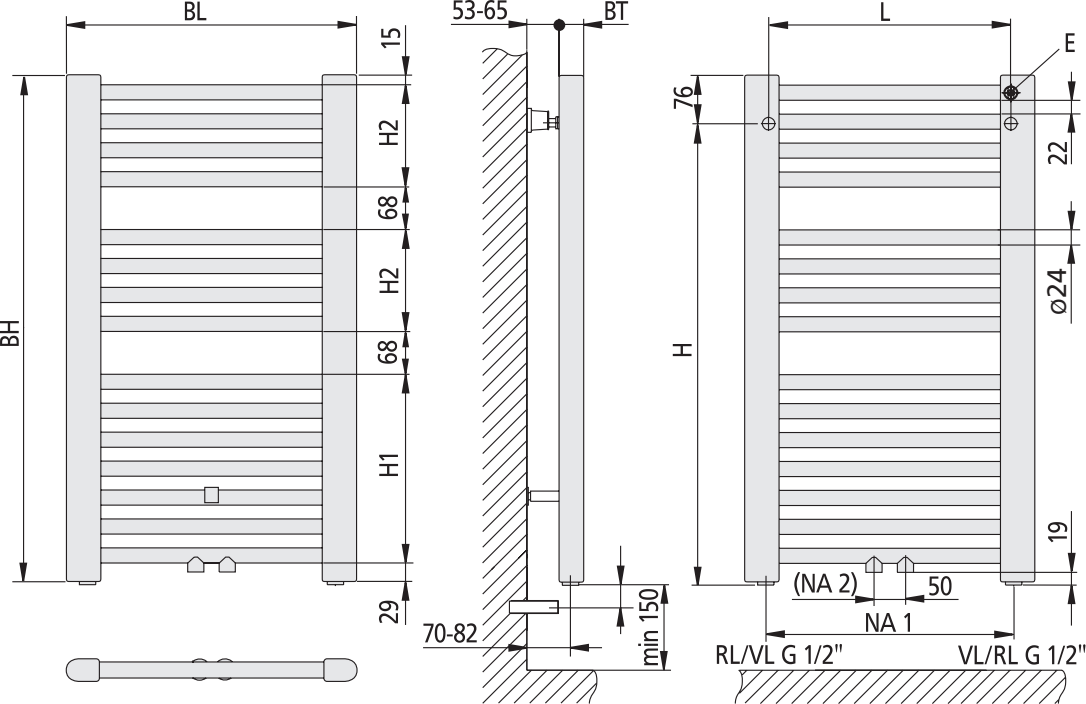
BL
15
H2
68
H2
68
H1
29
BH
53-65
BT
70-82
min 150
L
E
76
22
ø24
H
19
(NA 2)
50
NA 1
RL/VL G 1/2"
VL/RL G 1/2"